ITEM NO.	PART NUMBER	DESCRIPTION	Default/ QTY.
1	fixed bumper	GREY RUBBER	4
2	CASZ4	BZP WITH BOLTS AND WASHERS USE LOCTITE	2
3	CASZ4 BR	BZP WITH BOLTS AND WASHERS USE LOCTITE	2
4	TCT1 12 FRAME	SHEET 2 FRAME	1

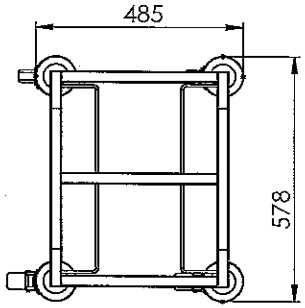

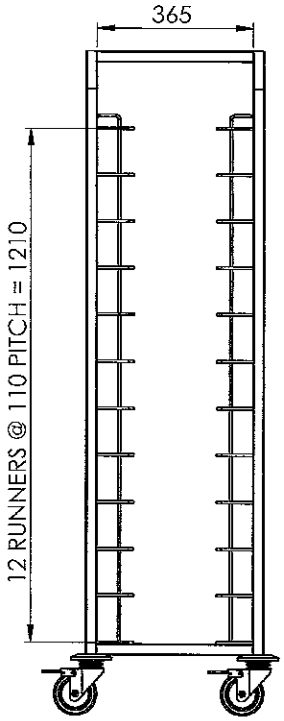

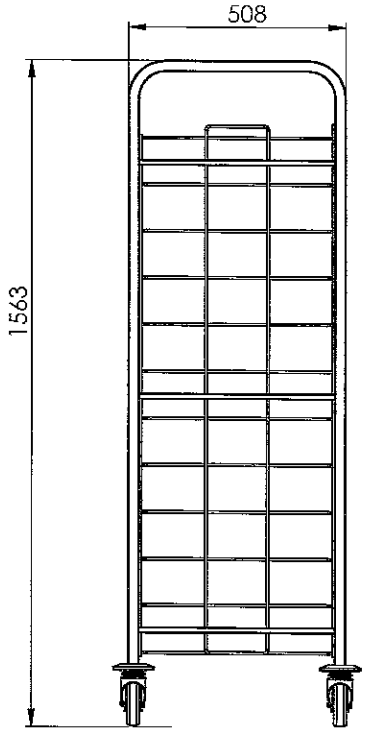

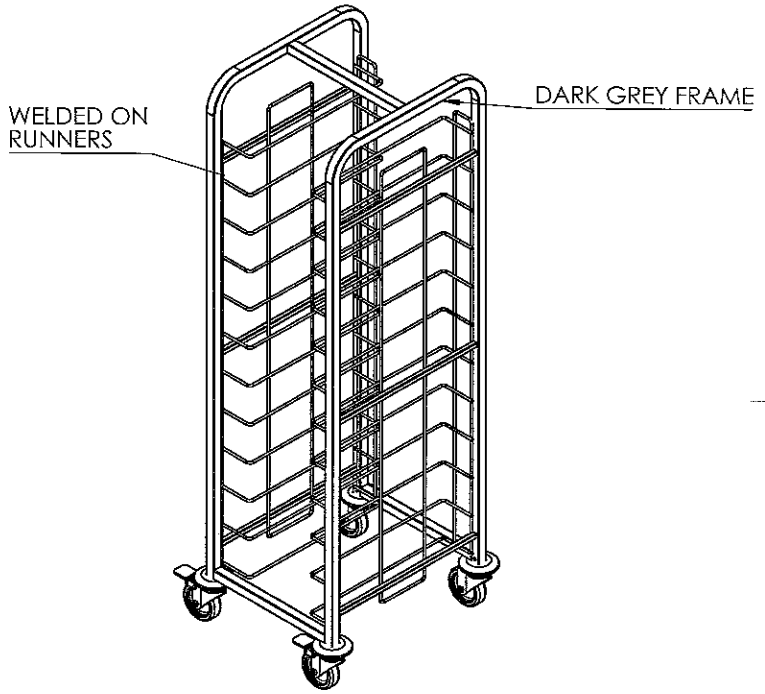

REVISIONS				
ZONE	REV.	DESCRIPTION	DATE	APPROVED
B3	A	NOW DARK GREY	06/01/2020	

ALL INTELLECTUAL PROPERTY RIGHTS OF WHATEVER NATURE INCLUDING, WITHOUT LIMITATION, COPYRIGHT & DESIGN RIGHTS CREATED BY OR FOR CRAVEN & Co. Ltd. REMAIN THE SOLE PROPERTY OF CRAVEN & Co. Ltd. NO COPY OR PART COPY SHALL BE MADE WITHOUT PERMISSION OF CRAVEN & Co. Ltd.

CRAVEN
Hygienic Storage & Handling
Craven & Co. Ltd., Manse Lane,
Knaresborough, N. Yorkshire, England. HG5 8ET
Tel: +44 (0)1423 796200, Fax: +44 (0)1423 869189
E-mail: sales@craven-solutions.com
Website: www.craven-solutions.com

(A)

UNLESS OTHERWISE SPECIFIED:
DIMENSIONS ARE IN MILLIMETERS
SURFACE FINISH:
TOLERANCES:
LINEAR: + or - 1.0mm
ANGULAR:

FINISH: EPOXY COATED FRAMEAND RUNNERS DARK GREY RAL 7011 BZP CASTORS

DEBUR AND BREAK SHARP EDGES

DO NOT SCALE DRAWING

REVISION A

CRAVEN

	NAME	SIGNATURE	DATE
DRAWN	G R TREMBLE		22 10 10
CHK'D			
APPV'D			
MFG			
Q.A			

MATERIAL: SEE B.O.M.

WEIGHT:

TITLE: TRAY CLEARING TROLLEY SINGLE 12 LEVEL

DWG NO. TCT1/12

A3

SCALE:1:12

SHEET 1 OF 4