Data sheet

iCombi® Pro XS 6-2/3 E



Capacity
> 6 lengthwise insertion for 2/3 GN-Containers
> Removable, swivelling hinging rack with flexible rack options on 11 levels per cooking system
> Wide range of accessories for various cooking processes such as grilling, braising or baking
> For use with 1/2, 2/3, 1/3 GN-Accessories

Designation

Intelligent, connectable cooking system with the operating modes poultry, meat, fish, egg dishes/desserts, side dishes/vegetables, baked goods and finishing as well as the cooking methods roasting, cooking, baking and grilling.
> Combi-steamer in accordance with DIN 18866 (in manual mode).
> For most cooking processes used in commercial kitchens.
> For the use of steam and convection, individually, successively or together.

The following intelligent assistants are available:

Intelligent assistants

iDensityControl iProductionManager iCookingSuite iCareSystem

iDensityControl
iDensityControl is the intelligent climate management system in the iCombi Pro. Thanks to the interaction of sensors, high-performance heating system and live steam generator as well as its active dehumidification, the right cooking chamber climate is always available. The intelligent air turbulence ensures the best possible energy input into the food. This therefore ensures exceptional productivity with high food quality, uniformity and minimal energy consumption.

iCookingSuite
The iCookingSuite is the cooking intelligence in the iCombi Pro. Initially, the user selects the cooking path from 7 operating modes and/or 4 cooking methods to suit the food. The desired cooking result is also specified by the user. The unit suggests browning and cooking degree adjustments. Intelligent sensors recognise the size, quantity and condition of the food. Depending on the cooking progress, all important cooking parameters such as temperature, cooking chamber climate, air speed and cooking time are adjusted to the second. The desired result is achieved with the best possible quality and in the shortest possible time. If desired, you can interrupt the cooking process and adjust the cooking result. The user can switch to iProductionManager or manual mode at any time. With the iCookingSuite, time, raw products and energy can be easily saved and without extra control effort, with standardised food quality.

iProductionManager
The iProductionManager organises the production process intelligently and flexibly. This includes which products can be cooked together on different inserts, the optimal order of the dishes and the monitoring of the cooking path. The iProductionManager supports you with information on inserting or removing dishes. Depending on the cooking process, the tickets can be placed anywhere or can be aligned with a specific target time. The iProductionManager arranges the food sequence accordingly and automatically makes the correct settings. The user decides if the food is cooked in an energy-optimised or time-optimised manner. Simple monitoring activities are no longer necessary, and working time and energy are saved.

iCareSystem
The iCareSystem is the intelligent cleaning and descaling system in the iCombi Pro XS 6-2/3. It recognises the current degree of dirt and calcification and suggests the ideal cleaning level and chemical quantity from 9 cleaning programmes. The quick interim cleaning cleans the iCombi Pro XS 6-2/3 in less than 30 minutes. All cleaning programmes can also run unsupervised overnight. With a low consumption of phosphate-free care products, water and energy, the iCareSystem is particularly economical and environmentally friendly. This keeps the iCombi Pro hygienically clean without any manual work and at a minimal cost.

Datenblatt, Version 11 - 04/05/2020 13:31 - We reserve the right to make technical changes.

Unit description and functional features

Intelligent functions
> Intelligent climate management with accurate moisture measurement, setting and control
> The actual measured humidity in the cooking chamber can be set and retrieved
> Dynamic air turbulence in the cooking chamber through 1 intelligently reversing high-performance fan wheels with 5 fan wheel speeds, intelligently controlled and manually programmable
> Intelligent control of cooking paths with automatic adjustment of the cooking steps to the defined desired result, e.g. browning and degree of cooking, safely and efficiently. Regardless of the operator, the size of the food and the loading quantity
> Precise monitoring and calculation of browning based on the Maillard reaction, in order to reproduce optimal cooking results
> Interrupt intelligent cooking paths or switch from the iCookingSuite to the iProductionManager for maximum flexibility
> Intelligent cooking step for fermenting baked goods
> Individual, intuitive programming by drag-and-drop of up to 1,200 cooking programmes with up to 12 steps.
> Easy transfer of cooking programmes to other cooking systems with secure cloud connection with ConnectedCooking or with a USB stick
> Automated, intelligent planning and control tool iProductionManager for the optimal organisation of several cooking processes and mixed loads. Automatic closing of planning gaps. Automatic time or energy optimisation of the planning and target time cooking, in order to start or stop cooking at the same time.
> Automatic recommencement and optimal completion of a cooking sequence after power failures that last less than 15 minutes
> Intelligent cleaning system suggests cleaning programmes and required amount of care products based on the degree of dirt of the cooking system
> Display of the current cleaning status and the descaling status
> Condensation hoods with an automatic increase in the extraction power when the cooking chamber door is opened. As an option, the hoods are available pre-assembled.

Cooking functions
> Effective steam generator for optimal steam performance even at low temperatures below 100 °C
> Integrated, maintenance-free grease separation system with no additional grease filter
> Cool-down function for fast cooling of the cooking space with selectable, additional fast cooling by means of water injection
> Core temperature probe with 6 measuring points as well as automatic error correction in the event of false readings. Optional positioning aid for soft or very small food (accessories)
> Delta-T cooking for particularly gentle preparation with minimal cooking losses
> Exact steaming, water volume adjustable in 4 levels in the temperature range from 30 °C - 260 °C for convection or a combination of steam and convection
> Digital temperature display adjustable in °C or °F, display of target and actual values
> Digital display of the cooking chamber humidity and time, display of target and actual values
> Time format adjustable in 24-hour format or am/pm
> 24-hour real-time clock with automatic conversion from summer to winter time when connected with ConnectedCooking
> Automatic pre-selected starting time with variable date and time
> Integrated hand shower with automatic return and single jet function
> Energy-saving, long-life LED lighting in the cooking chamber with high colour rendering for quick detection of the current state of food
> Free hotlines for questions regarding technology and application support (ChefLine)

Occupational and operational safety
> Electronic safety temperature limiter for steam generator and convection heating
> Integrated fan wheel brake
> Maximum contact temperature of the cooking cabinet door 73 °C
> Use of Active Green cleaner tabs and care tabs (solid matter cleaner) for optimal work safety
> HACCP data storage and output via USB or optional storage and management in the cloud-based networking solution ConnectedCooking
> Tested according to national and international standards for unsupervised operation
> Maximum rack height not higher than 1.6 m when using a RATIONAL base frame
> Ergonomic door handle with right/left opening and door closing function

Networking
> Integrated, IP-protected Ethernet interface for wired connection to the cloud-based networking solution ConnectedCooking
> Integrated WLAN interface for wireless connection to the cloud-based networking solution ConnectedCooking
> Integrated USB interface for local data exchange
> Central unit management, recipe, shopping cart and programme management, HACCP data management, maintenance management by means of the cloud-based networking solution ConnectedCooking

Cleaning and care
> Non-mains pressure dependent automatic cleaning and care system for cooking cabinet and steam generator
> 9 cleaning programmes for unsupervised cleaning, even overnight, with automatic cleaning and descaling of the steam generator
> Fast cleaning in less than 30 minutes for almost uninterrupted, hygienic production
> Automatic safety routine after a power failure ensures a detergent-free cooking chamber even after the cleaning has been cancelled
> Use of phosphate and phosphorous free Active Green cleaning tabs and care tabs
> Hygienic, floor-level installation without feet for easy, safe cleaning
> 3 pane oven door with rear ventilation, heat-reflecting special coating and swivelling glass panes for easy cleaning
> Material inside and outside stainless steel DIN 1.4301, seamless hygienic cooking chamber with rounded corners and optimised air flow
> Easy and safe external cleaning due to glass and stainless steel surfaces as well as protection against water jets from all directions due to protection class IPX5
> Monitoring option for automatic cleaning by means of the cloud-based networking solution ConnectedCooking

Datenblatt, Version 11 - 04/05/2020 13:31 - We reserve the right to make technical changes.

Operation
> High-resolution 9" TFT colour display and capacitive touchscreen with self-explanatory symbols for simple, intuitive operation and control using sweep or swipe movements
> Acoustic prompt and visual display when user intervention is required
> Central dial with push function for intuitive selection and confirmation of entries
> More than 55 languages can be configured for user interface and help function
> Basic cooking preferences of the country-specific cuisine can be selected, regardless of the language set for the unit. Another country-specific cuisine can be selected
> Specially adapted cooking parameters for international or country-specific dishes can be selected and started, regardless of the language set for the unit
> Extensive search function in all cooking paths, application examples and settings
> Context-sensitive help, which always displays the current help content for the displayed screen content
> Starting application examples from the help
> Easy selection of cooking paths over 7 operating modes and/or from 4 cooking methods
> Cockpit function to display information about the processes within a cooking path
> Customisation and control of user profiles and access rights to prevent operating errors
> Interactive messages about cooking paths, calls to action, intelligent functions and warnings with the Messenger

Installation, maintenance and environment
> Professional installation by certified technicians recommended by RATIONAL
> Fixed waste water connection conforming to SVGW requirements is permitted
> Customisation to the installation location (height above sea level) with automatic calibration
> Operation without water softeners and without additional manual descaling is possible
> Installation flush with the floor and wall with only 10 mm (0.4 ") wall clearance by connection in the base area*
> Service diagnosis system with an automatic indicator of service messages and a self-test function for active assessment of unit functions.
> Remote diagnosis with ConnectedCooking by certified RATIONAL service partners
> RATIONAL 2 year guarantee including parts, work and journey**
> Regular maintenance is recommended. Maintenance in accordance with the manufacturer's recommendation by RATIONAL service partners

*For details, see the installation or designer manual

**Terms and conditions apply, see manufacturer's guarantee policy on the website www.rational-online.com

Options
> Cooking chamber door with left-hinged opening
> MarineLine – Marine design
> Energy optimisation system connection
> Connection to operations monitoring (potential-free contacts)
> Safety door lock
> Design without WLAN configuration

Datenblatt, Version 11 - 04/05/2020 13:31 - We reserve the right to make technical changes.

Technical specifications

Dimensions and weight

Dimensions (W x D x H)	
Cooking system (body)	655 x 567 x 555 mm
Cooking system (complete)	655 x 594 x 621 mm
Cooking system with packaging	900 x 770 x 950 mm
Maximum working height top rack*	≤ 1.60 m

*with use of an appropriate RATIONAL base frame

Weight	
Maximum loading quantities/rack	3.33 kg
Maximum total loading quantities	20 kg
Weight electric unit without packaging	67 kg
Weight electric unit with packaging	76 kg

Connection requirements electric

Voltage 3 NAC 400 V	
Electrical connected loads	5.7 kW
Steam mode output	5.4 kW
Convection mode output	5.4 kW
Fuse	10 A
RCD model	F
Voltage 3 AC 220 V	
Electrical connected loads	5.3 kW
Steam mode output	5 kW
Convection mode output	5 kW
Fuse	20 A
RCD model	B
Voltage 1 NAC 230 V	
Electrical connected loads	5.3 kW
Steam mode output	5 kW
Convection mode output	5 kW
Fuse	25 A
RCD model	F

Connection requirements water

Water inlet (pressure hose)	3/4"
Water pressure (flow pressure)	1.0 - 6.0 bar
Water outlet	DN 40
Min./Max. flow rate	5 l/min

Connection conditions exhaust air and thermal load

Latent heat load	283 W
Sensible heat output	375 W
Noise level	52 dBA

Connection requirements data

LAN data interface	RJ45
WiFi data interface	IEEE 802.11 a/g/n

Minimum clearances during installation

Minimum clearance	Left	Back	Right
Standard	min. 10 mm	min. 10 mm	min. 10 mm

> Comprehensive technical information on kitchen planning and unit installation can be found in the planning manual or in the installation instructions on our business customer portal.

Installation conditions

> If heat sources act on the left side of the unit, the minimum distance on the left must be 350 mm.
> Specific national and regional standards and regulations which concern the installation and operation of commercial cooking appliances must be complied with. The local standards and regulations for ventilation systems must be adhered to.
> To use ConnectedCooking, a RJ45 network access point or the option to integrate into a WLAN (IEEE 802.11 a/g/n) must be provided on site. A data rate of at least 100 MB/s should be provided for optimal performance.

Certifications

Datenblatt, Version 11 - 04/05/2020 13:31 - We reserve the right to make technical changes.

Technical drawing

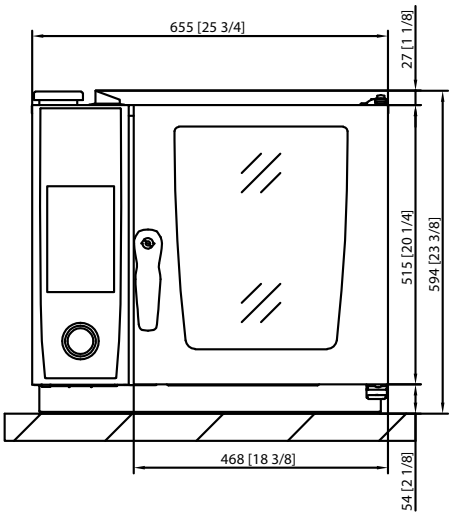

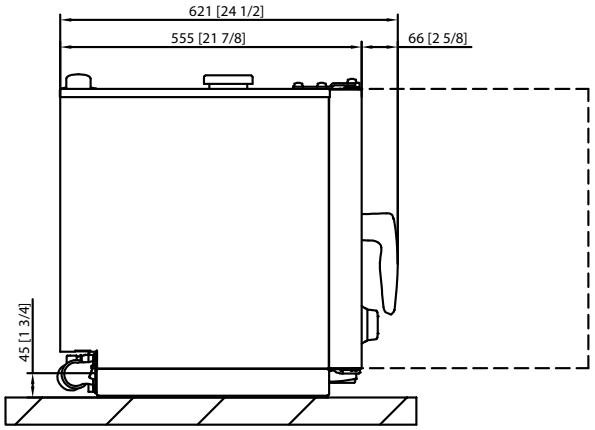

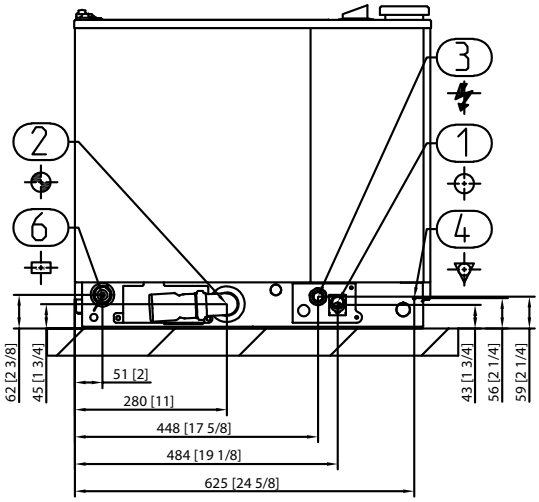

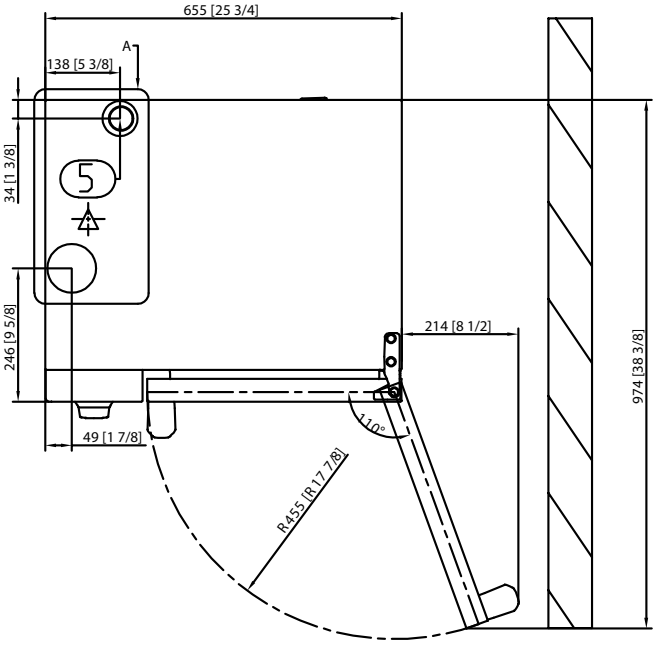

1	Water inlet
2	Water outlet
3	Electrical connection
4	Equipotential bonding
5	Ventilation pipe
6	Ethernet interface

Datenblatt, Version 11 - 04/05/2020 13:31 - We reserve the right to make technical changes.

Accessories

Accessories	Article number
RATIONAL Active Green cleaner tabs - guarantees the best cleaning performance	
RATIONAL care tabs – effectively prevents limescale deposits	
Unit installation kit	
Wall mounting kit for 6-2/3 units	
Base frames in different designs - standard, with castors or fixable stainless steel feet	
Combi-Duo kit - to build a Combi-Duo for electric units	
Heat shield - to install a unit next to a heat source, e.g. a grill	
Condensation breaker - to divert steam and vapours into existing exhaust systems	
UltraVent Plus condensation hood – only for electric units	
UltraVent condensation hood – only for electric units	
RATIONAL USB stick – for the safe transfer of cooking programmes and HACCP data	

To achieve an optimal cooking result, you will find a wide range of cooking accessories and information on additional accessories in the accessories brochure, from your distributor or at www.rational-online.com

Datenblatt, Version 11 - 04/05/2020 13:31 - We reserve the right to make technical changes.

Planners	RATIONAL International AG
	Heinrich-Wild-Straße 202, CH-9435 Heerbrugg Tel. +41 71 727 9090 Fax +41 71 727 9080 Email: info@rational-online.com Visit us on the internet: www.rational-online.com